REVISIONS				Date: 16/06/08
				Drawing No: SERVERY OPTION
No	Description	Date	Name	POD303.com
				generic service hub

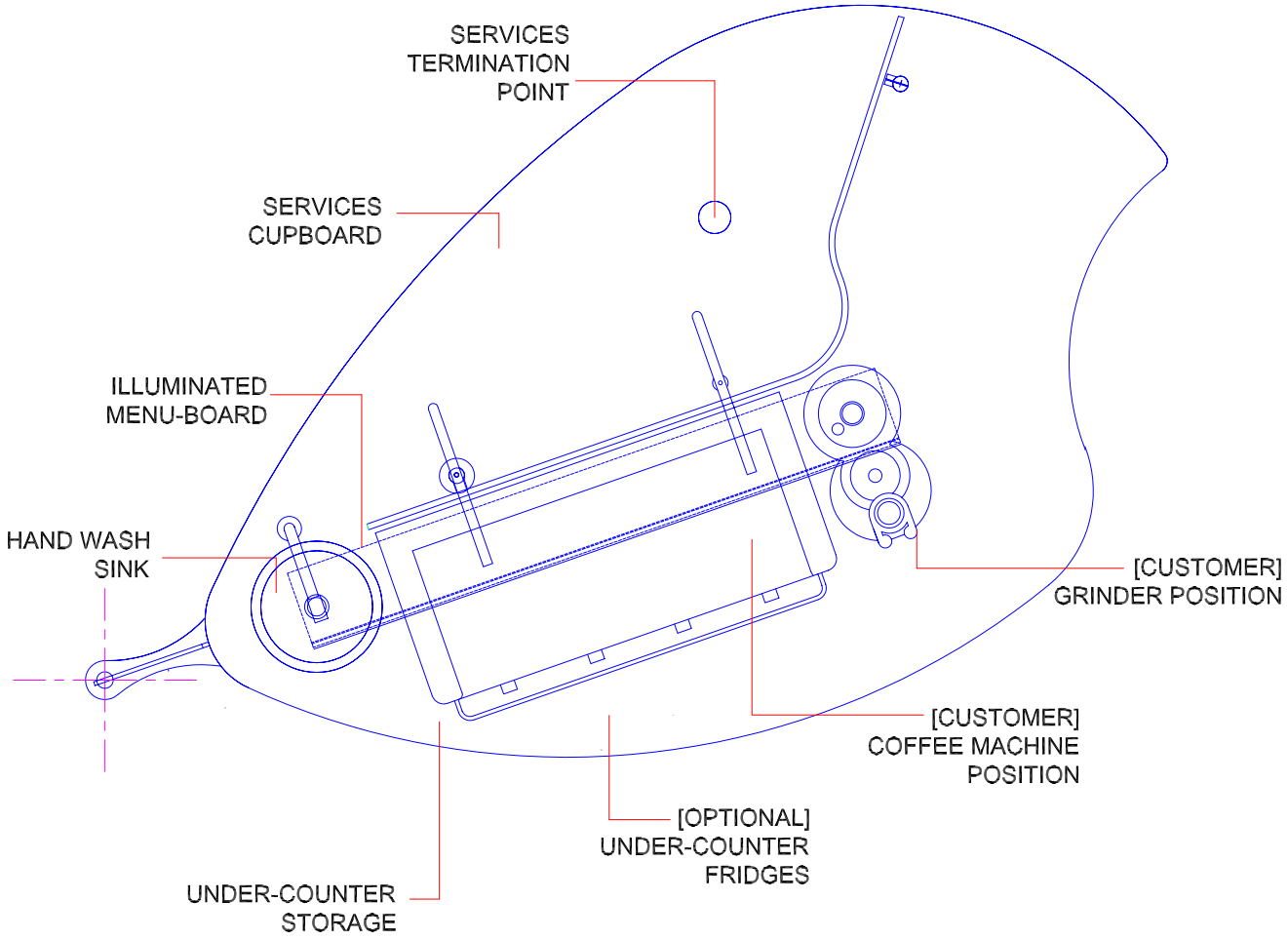

THIS DRAWING IS COPYRIGHT AND THE PROPERTY OF POD303.COM.
CONTRACTOR TO VERIFY ALL DIMENSIONS AND NOTIFY POD303 OF ANY DISCREPANCIES WITHIN 48 HRS